VAMP
BLOCK DIAGRAM

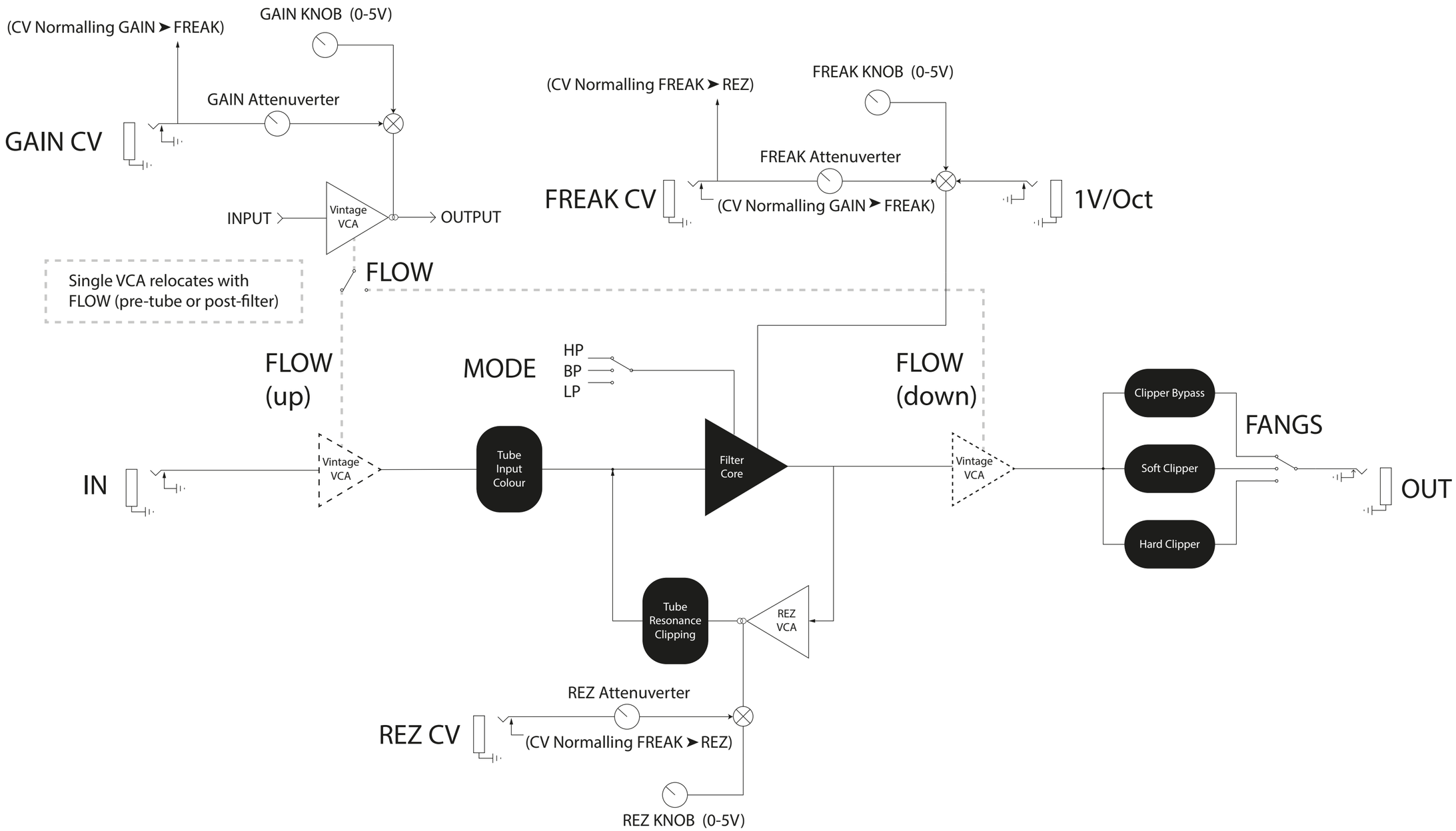

APOLLO VIEW